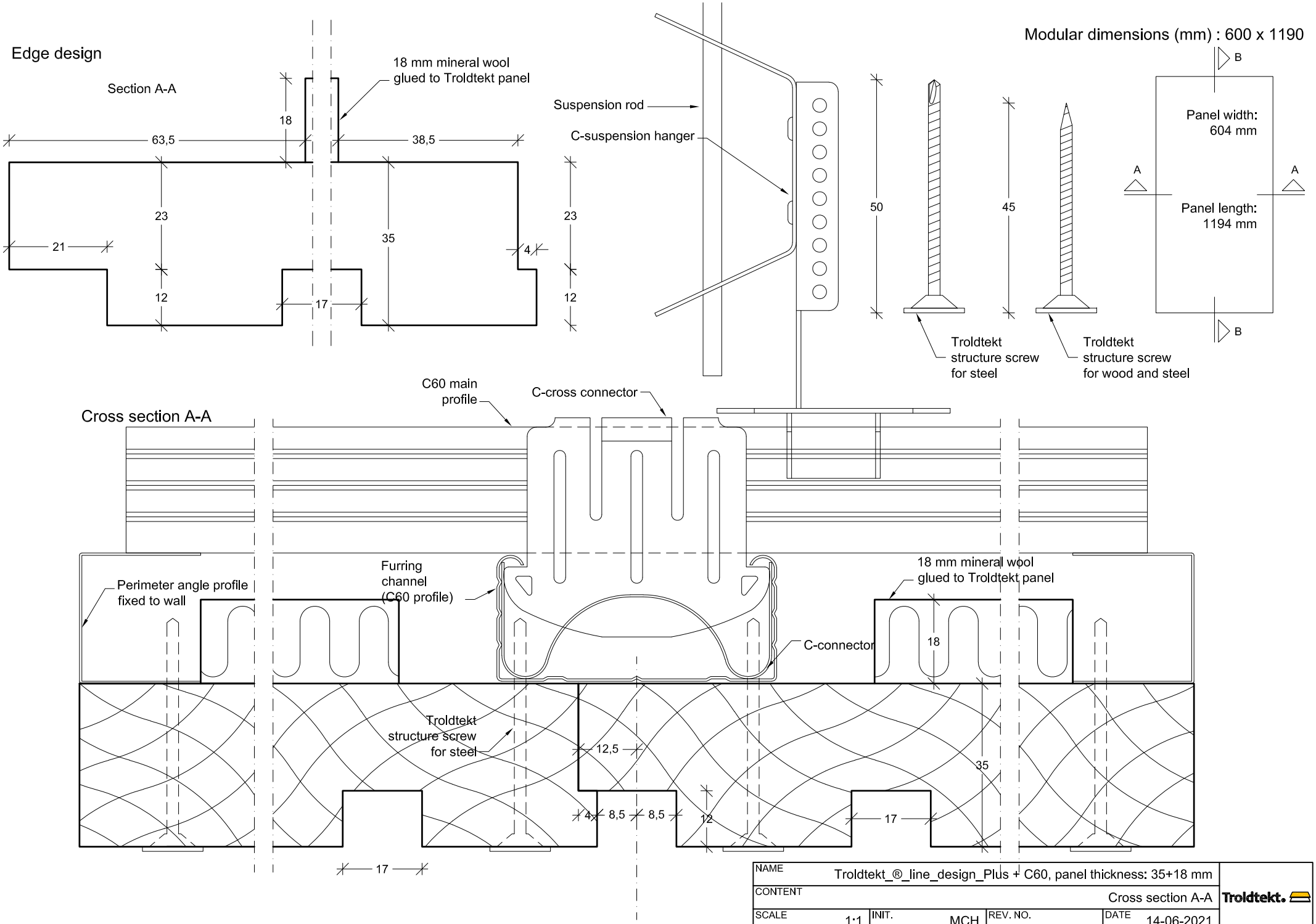

NAME	Troldtekt_®_line_design_Plus + C60, panel thickness: 35+18 mm			Troldtekt.
CONTENT	Cross section A-A			
SCALE 1:1	INIT. MCH	REV. NO.	DATE 14-06-2021	

Troldtekt_®_line_design_c60_35+18mm_EN.dwg

Edge design

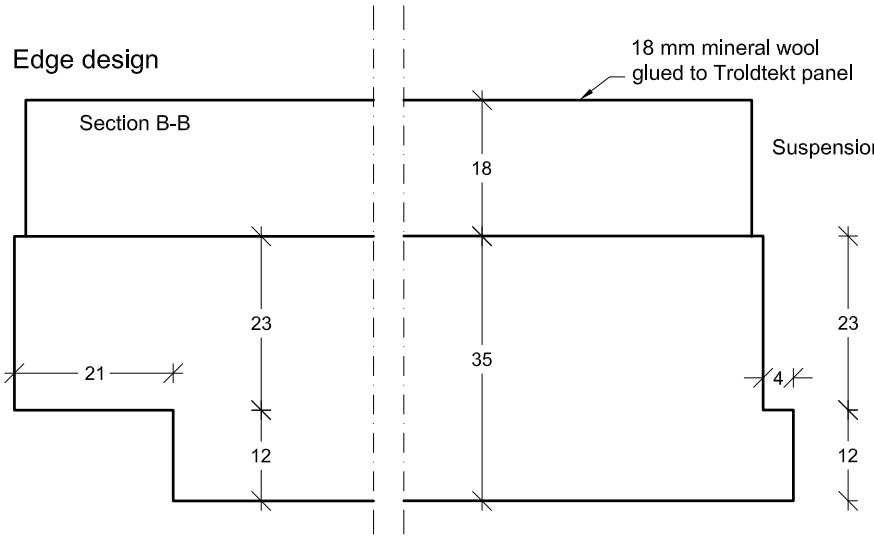

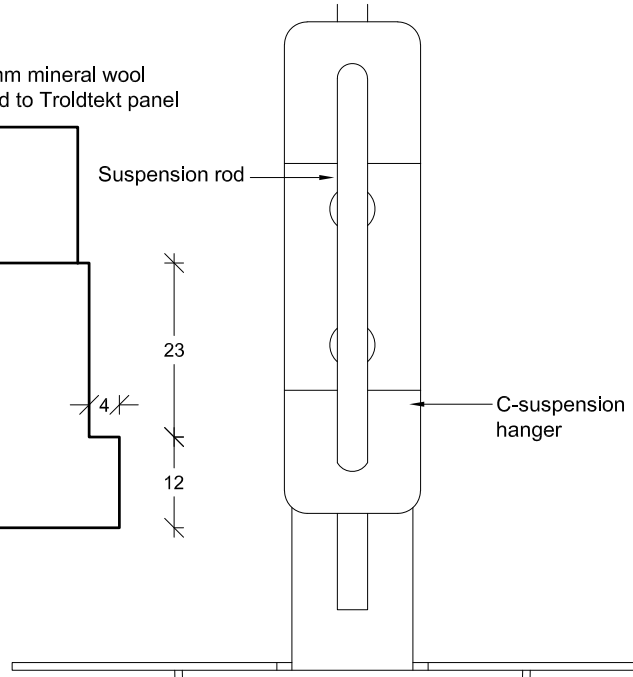

Modular dimensions (mm) : 600 x 1190

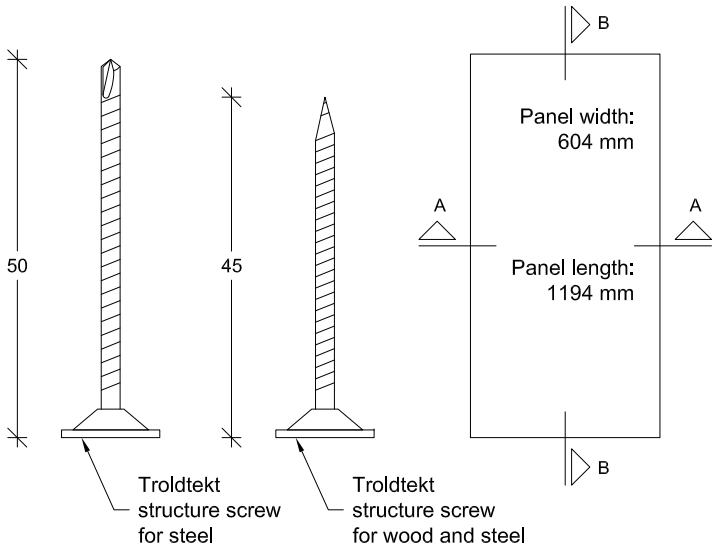

Longitudinal section B-B

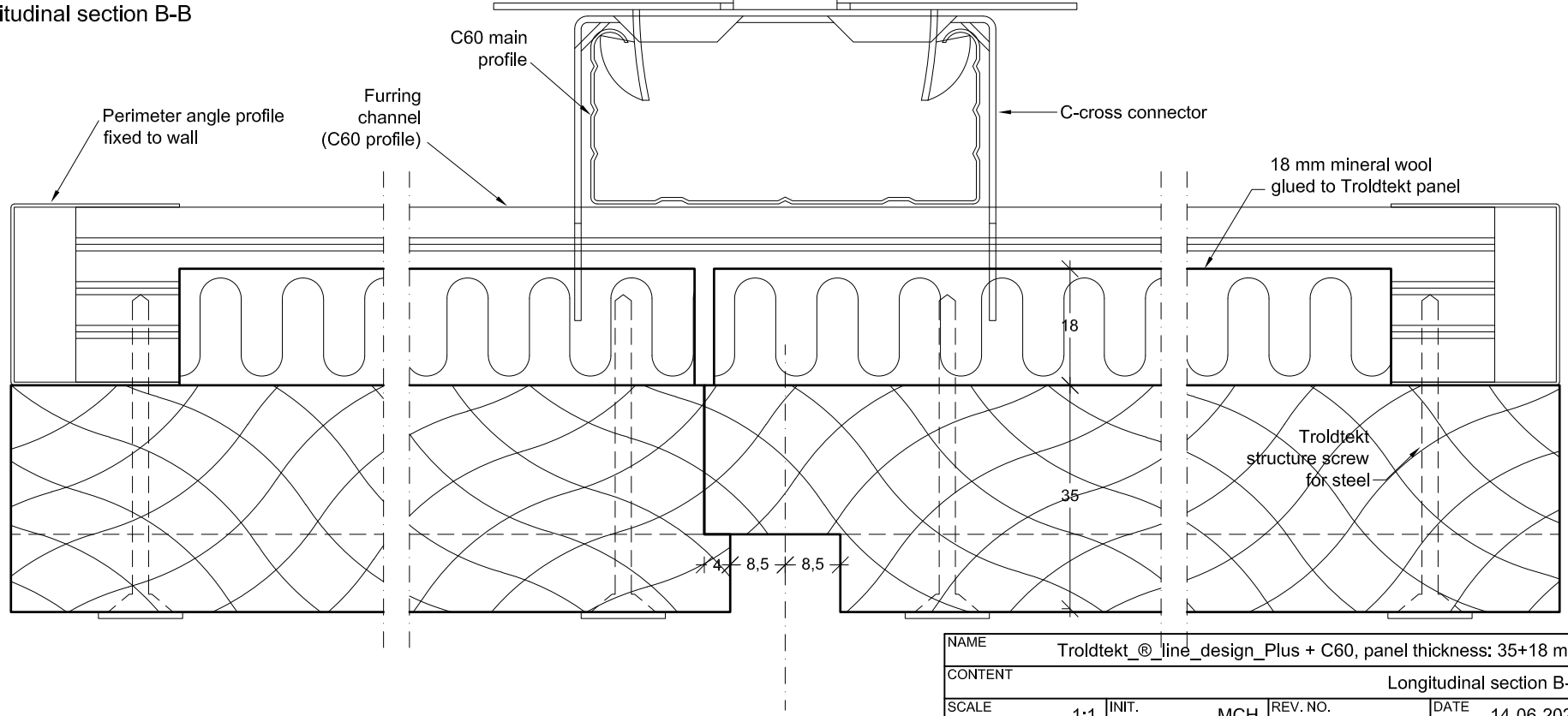

NAME	Troldtekt_®_line_design_Plus + C60, panel thickness: 35+18 mm			Troldtekt.
CONTENT	Longitudinal section B-B			
SCALE 1:1	INIT. MCH	REV. NO.	DATE 14-06-2021	

Troldtekt_®_line_design_c60_35+18mm_EN.dwg